Cubeli

Self-Balancing Cube on a Moving Platform

A reaction-wheel-driven cube that maintains balance on its corner while mounted on a hand-like robotic platform in continuous motion.

1. Design Intent

What experience are you trying to create?

BALANCE ARM is a robotic system where a self-balancing cube - standing on its corner using three internal reaction wheels - is mounted on top of a moving, hand-like robotic platform. As the platform tilts, sweeps, and rotates (mimicking how a human hand might carry an object), the cube continuously compensates and stays balanced on its corner.

The visual effect is striking: an arm reaches out, moves through space, and on its tip sits a cube - perfectly still on one corner - despite the world moving beneath it. It demonstrates that sophisticated balance control can adapt to a dynamic, unpredictable base, not just a static floor.

Who is it for?

- Science exhibitions and maker showcases where the visual drama makes the concept memorable

What problem does it solve?

Most self-balancing robots assume a stationary or flat base. In real-world applications - a drone carrying a payload, a robot arm transporting a fragile component, a moving vehicle carrying sensitive instruments - the base itself is moving. BALANCE ARM tackles this: how does a balancing system maintain stability when the ground beneath it is never still?

The answer lies in combining the cube's own balance controller with real-time awareness of the platform's motion, so corrections anticipate the platform rather than just react to the cube's tilt alone.

2. Inspiration & References

Reference	What It Is	What We Learned
Cubli - ETH Zurich (2013)	Original corner-balancing cube using 3 reaction wheels	Proved reaction-wheel balance works in 3D. Jump-up is possible. Yaw drift is a known limitation.
remrc / Self-Balancing-Cube (GitHub)	Open-source ESP32 + Nano build using Nidec 24H motors + MPU-6050	Exact hardware, firmware structure, and wiring we build the cube unit from.
Camera Gimbal Stabilisers	3-axis motorised gimbals that keep a camera level despite hand movement	Inverse of our problem: gimbals isolate the payload FROM motion. We want the cube to self-correct DESPITE motion.
Boston Dynamics Spot	Quadruped robot that balances and walks on uneven terrain	Dynamic base adaptation - the robot's legs move yet the body stays level. Feedforward compensation is key.
Stewart Platform	6-DOF parallel robot platform used in flight simulators	Inspiration for the moving platform. Simpler 2-DOF servo version is buildable for our scale.
Waiter Carrying a Tray	Human carrying a tray through a crowded, moving environment	The wrist adapts to movement while the hand's intention is to keep the tray level. Exact analogy for our system.
Columbia Univ. Paper (Zhang)	Full Lagrangian dynamics model, LQR + H-inf controller for cube	H-inf is more robust to disturbances than LQR - critical when the base is moving and unpredictable.

3. User Journey

Step-by-step system experience - from power-on to operation:

Step 1 - System powers on

The robotic arm platform is at rest, horizontal. The cube sits flat on the platform's top surface. LEDs on the cube glow steady white - indicating standby mode. The platform waits for the jump-up sequence to complete before it begins moving.

Step 2 - Cube jumps upright

The cube's firmware detects it is lying flat (via accelerometer). It spins all three reaction wheels to maximum RPM, then abruptly brakes them. The stored angular momentum kicks the cube upright onto its corner. The cube's LEDs shift to green: balanced.

Step 3 - Platform begins moving

The platform motor moves,the arm begins a slow sweep - tilting 10 degrees forward, then rotating left. The cube feels the tilt immediately through its MPU-6050.

Step 4 - Cube compensates in real time

As the platform tilts, the cube's controller reads the increased error angle and spins the relevant reaction wheel harder to push back. The cube visibly stays vertical even as the platform beneath it rotates. LEDs remain green.

Step 5 - Platform introduces harder disturbances

The platform ramps up - faster sweeps, sharper direction changes, combined multi-axis movements. The cube's LEDs shift to yellow during peak disturbances but recover to green within milliseconds. A buzzer tone rises and falls with tilt severity.

Step 6 - Shutdown sequence

Platform returns to home (horizontal). Cube spins down its wheels gradually to avoid a sudden torque kickback. LEDs fade to off.

4. Success Criteria

Functional Success

Criterion	Target	How to Measure
Cube balances on static platform	Unaided for >= 5 minutes	Timer from jump-up to first fall, no platform motion
Cube balances during slow platform tilt	Survives up to 15 deg tilt at 5 deg/s	Servo tilts platform at measured rate; log fall events
Cube balances during fast sweep	Survives 30 deg/s platform sweep	Scripted motion test; count successful recoveries
Multi-axis simultaneous motion	Balances tilt + rotation at same time	Combined axis test; cube should not fall for > 30 sec

Experience Success

- An observer immediately understands what is happening without explanation
- The moment of recovery - cube wobbling then catching itself mid-air - creates a visible 'wow' reaction
- The system demonstrates graceful degradation: partial failure (cube wobbles) before total failure (cube falls)

Reliability & Safety

- Platform motion range is mechanically limited to prevent dangerous over-rotation (hard stops on servos)
- Cube fall does not damage hardware - padded catch zone around the pedestal
- Automatic shutdown if battery drops below 3.4V per cell
- All wiring routed through the arm's cable channel - no loose wires that could tangle during rotation

5. System Overview

The system has two tightly coupled subsystems: the CUBE (the self-balancing robot) and the PLATFORM (the moving hand-like arm). They share sensor data so the cube's controller can anticipate platform movements, not just react to them.

Subsystem 1 - The Cube (Balance Unit)

- ESP32 or Arduino Nano - runs balance controller (LQR / PID), reads sensor, drives motors
- MPU-6050 IMU (Cube) - measures cube's absolute tilt in all 3 axes at ~1kHz
- 3x Nidec 24H BLDC motors - reaction wheels on X, Y, Z axes
- RGB LEDs - live status: green (balanced), yellow (correcting), red (critical), white (standby)
- Passive buzzer - rising tone as tilt severity increases; chirp on successful recovery
- LiPo 500mAh battery - self-contained power inside the cube
- 3D printed cube shell (100x100x100mm) + 3 reaction wheel discs (diameter ~65mm)

Subsystem 2 - The Platform (Hand / Arm Unit)

- 2-DOF servo gimbal - two high-torque servos (MG996R or similar) giving pitch + roll motion
- Platform MCU (ESP32) - executes motion scripts
- Structural arm (3D printed or aluminium extrusion) - holds the gimbal elevated ~30cm
- Base plate - weighted base to prevent tipping of the whole assembly
- Wiring channel through arm - keeps servo + communication wires tidy and tangle-free

6. Block Diagram

Two control loops running in parallel - Platform Loop and Cube Balance Loop:

PLATFORM LOOP						
Servo Gimbal	->	Platform Moves				
			v			
			-->			
CUBE BALANCE LOOP						
Cube IMU (MPU-6050)	->	LQR/PID Controller	->	Motor PWM x3	->	Reaction Wheels Spin
						v
						Torque on Cube Body
<--	Cube tilt angle corrected					^ FEEDBACK
LED Status + Buzzer						

7. Input / Output Mapping

INPUT	PROCESS	OUTPUT
Cube MPU-6050 reads cube absolute tilt (a, b angles)	LQR / PID controller computes torque needed for each of 3 axes	3x PWM signals sent to Nidec 24H motors; wheels speed up/slow
Reaction wheel speed change (angular momentum shift)	Newton's 3rd law: wheel torque = opposite reaction on cube body	Cube tilts back toward vertical; tilt error reduced toward zero
Tilt error angle fed back into controller (closed loop)	Controller recalculates correction each cycle (~1000 Hz)	Continuous fine adjustment; cube appears magically still
Battery ADC reading via R2/R3 voltage divider	Compare to threshold (e.g., 3.4V per cell) in firmware	LED flash + buzzer low-battery warning; autoshutdown at 3.2V

8. Sketches & Concepts

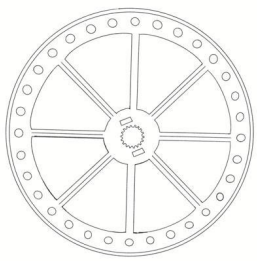

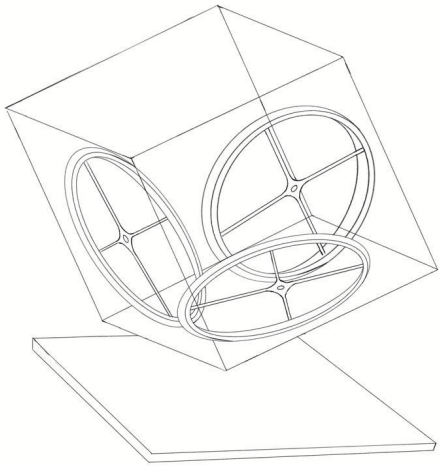

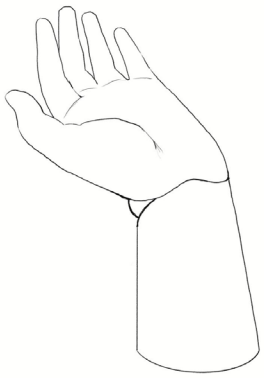

9. Final System Architecture (Labelled)

Complete hardware architecture for both the Cube unit and the Platform unit. Two wiring variants are supported for the cube (ESP32 or Arduino Nano). The platform uses a dedicated Arduino Nano as its motion controller.

9.1 Cube Unit - Full Component List

#	Component	Model / Value	Connects To	Role
1	Cube MCU	ESP32 NodeMCU-32 (or Arduino Nano V3.0)	All cube peripherals	Runs LQR/PID; receives platform feedforward data
2	Cube IMU	MPU-6050	MCU: GPIO 21 SDA, 22 SCL	Reads cube absolute tilt a, b, g at ~1kHz
3	Motor A	Nidec 24H BLDC	MCU PWM pin (pitch axis)	Reaction wheel - controls forward/backward tilt
4	Motor B	Nidec 24H BLDC	MCU PWM pin (roll axis)	Reaction wheel - controls left/right tilt
5	Motor C	Nidec 24H BLDC	MCU PWM pin (yaw axis)	Reaction wheel - controls rotational drift
6	Voltage Reg.	78xxl LDO (ESP32 only)	Battery+ to ESP32 VIN	Steps down LiPo to 3.3V
7	Cap C3	100uF 35V electrolytic	Across VCC / GND	Smooths motor current spikes
8	Cap C2	100nF 35V ceramic	Near MCU power pin	Kills high-freq switching noise
9	Transistor Q1	2N2222 NPN (Nano) / PNP (ESP32)	GPIO -> R4 -> base	Drives buzzer beyond GPIO current limit
10	Resistor R4	6.8k ohm 0.25W	GPIO to transistor base	Limits current into Q1 base
11	Resistor R3	33k ohm 0.25W	Battery+ voltage divider top	Battery voltage monitor (top divider)
12	Resistor R2	10k ohm 0.25W	Divider to GND	Battery voltage monitor (bottom divider)
13	Buzzer	Passive buzzer	Q1 collector	Rising tone as tilt increases
14	RGB LED strip	WS2812B or common cathode	MCU digital pin	Green/yellow/red tilt status display
15	Battery	LiPo 500mAh (1-2S for ESP32; 3S1P for Nano)	Regulator input	Main power for cube

9.2 Platform Unit - Full Component List

1	Pitch Servo	MG996R (180 deg, metal gear)	Nano D9 (PWM)	Tilts platform forward / backward (pitch axis)
2	Capacitor	1000uF 16V electrolytic	Across 5V servo rail	Prevents servo current spikes browning out Nano
3	Arm structure	300mm aluminium extrusion or 3D print	Gimbal mount	Elevates gimbal; has internal cable channel
4	Base plate	200x200mm, 5mm steel or acrylic + weights	Arm base	Prevents whole assembly tipping under servo torque
5	Battery	2S LiPo 1000mAh	Servo 5V reg + Nano	Dedicated power for platform

	(platform)		VIN	(isolated from cube)

9.5 Key Dimensions Summary

Component	Dimension	Notes
Cube body	100 x 100 x 100 mm	3D printed PLA/PETG, 30-40% infill
Reaction wheel disc	~65mm diameter, ~10mm thick	High infill (70%+) for rotational inertia
Cube corner tip	Hardened metal cap	Prevent wear; affects balance point
Gimbal pedestal top	~85mm diameter circle	Flat surface for cube's corner to rest on
Pitch servo span	~60mm between mounting points	MG996R dimensions dictate frame size
Roll servo span	~60mm between mounting points	Nested inside pitch frame
Arm height	300mm	Elevates gimbal for visibility
Base plate	200 x 200mm, 5mm thick	Steel preferred for weight; prevents tip-over
Full assembly height	~500mm (cube tip to base)	Fits on a standard table
Total weight (approx)	900g - 1.2kg	Cube ~350g + platform + base weights